●General Description

The N-Channel MOSFET LH25N50 has the low $R_{DS(on)}$,low gate charge,fast switching and excellent avalanche characteristics.This device is suitable for fast charge and lighting.

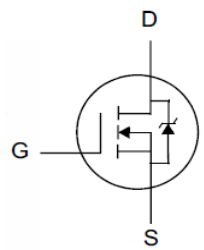

VDS =500V

$R_{DS(ON)}$ =210mΩ

ID =25A

TO-220

TO-220F

■ RoHS COMPLIANT

●Features

- ■Advanced Planar Process
- ■RDS(ON),typ.=210 mΩ@VGS=10Vow $R_{DS(on)}$ & FOM
- ■Low Gate Charge Minimize Switching Loss
- ■Rugged Poly silicon Gate Structure

●Application

- ■BLDC Motor Driver
- ■Electric Welder
- ■High Efficiency SMPS

●Ordering Information:

Part Number	LH25N50	LH25N50
Package	TO-220	TO-220F
Basic Ordering Unit (pcs)	1000	1000
Normal Package Material Ordering Code	LH25N50T-TO220-TU	LH25N50-TO220F-TU
Halogen Free Ordering Code	LH25N50T-TO220-TU-HF	LH25N50-TO220F-TU-HF

●Absolute Maximum Ratings（TC =25℃）

PARAMETER	SYMBOL	Value		UNIT
Drain-Source Breakdown Voltage	BV_{DSS}	500		V
Gate-Source Voltage	V_{GS}	±30		V
Continuous Drain Current ,T_C = 25°C	I_D	25		A
	I_D(T_C=100°C)	16		
Pulsed Drain Current at VGS=10V[2,4]	I_{DM}	98		A
Single Pulse Avalanche Energy	E_{AS}	2000		mJ
Peak Diode Recovery dv/dt3	dv/dt	5.0		V/ns
Power Dissipation	P_D	TO-220:300	TO-220F:85	W
Derating Factor above 25℃		TO-220:2.4	TO-220F:0.68	W/℃
Operating Temperature	T_J	-55~+150		℃
Storage Temperature	T_{STG}	-55~+150		℃
Maximum Temperature for Soldering Leads at 0.063in (1.6mm) from Case for 10 seconds, Package Body for 10 seconds	T_L	300		℃
	T_{PAK}	260		

●Electronic Characteristics

PARAMETER	SYMBOL	TEST CONDITION	MIN	TYP	MAX	UNIT
Drain-Source Breakdown Voltage	BV_{DSS}	V_{GS} =0V, I_D=250uA	500	--	--	V
Gate Threshold Voltage	$V_{GS(TH)}$	V_{DS}=V_{GS},I_D=250uA	2.0	--	4.0	V
Drain-source On Resistance	$R_{DS(ON)}$	V_{GS} =10V, I_D=13A	--	210	280	mΩ
Drain-Source Leakage Current	I_{DSS}	V_{DS}=500V,V_{GS}=0V,T_J=25℃	--	--	1	uA
		V_{DS}=400V,V_{GS}=0V,T_J=125℃	--	--	125	
Gate-Source Leakage Current	I_{GSS}	$V_{GS=}$±30V,$V_{DS=}$0V	--	--	+100	nA
		$V_{GS=}$-30V,$V_{DS=}$0V	--	--	-100	
Forward Transconductance	g_{FS}	V_{GS} =25V, I_D=13A	--	32	--	S
Input Capacitance	Ciss	VGS=0V, VDS=25V, f=1MHz	--	3500	--	pF
Output Capacitance	Coss		--	300	--	
Reverse Transfer Capacitance	Crss		--	280	--	
Turn -Off Delay Time	Td(off)	V_{GS}=10V, V_{DD}=250V, R_G=25Ω, ID=13A	--	120	--	ns
Fall time	tf		--	80	--	
Turn-on delay time	td(on)		--	45	--	
Rise time	tr		--	90	--	
Total Gate Charge(10V)	Qg	V_{GS}=0Vto 10V, V_{DS}=250V, ID=25A	--	65	--	nC
Gate-to-Source Charge	Qgs		--	19	--	
Gate-to-Drain Charge	Qgd		--	17	---	
Continuous Diode Forward Current[1,5]	I_S	Integral PN-diode in MOSFET	--	--	25	A
Pulsed Source Current[2]	I_{SM}		--	--	98	
Diode Forward Voltage[2]	V_{SD}	Is=25A,V_{GS} =0V	--	--	1.5	V
Reverse Recovery Time	trr	V_{GS}=0V, If=25A, di_F/dt=100A/μs	--	565	--	ns
Reverse Recovery Charge	Qrr		--	4.2	--	uC

●Thermal Characteristics

PARAMETER	SYMBOL	MAX		UNIT
		TO-220	TO-220F	
Thermal Resistance Junction-case	Rth_{JC}	0.42	1.47	℃/W
Thermal Resistance Junction-ambient	Rth_{JA}	62.5	100	℃/W

Notes:

1.T_J=+25℃to +150℃

2.Silicon limited current only.

3.Package limited current.

4. Repetitive rating,pulse width limited by maximum junction temperature.

5.Pulse width≤380uS; duty cycle≤2%.

●Typical Characteristics

Figure 1. Maximum Transient Thermal Impedance

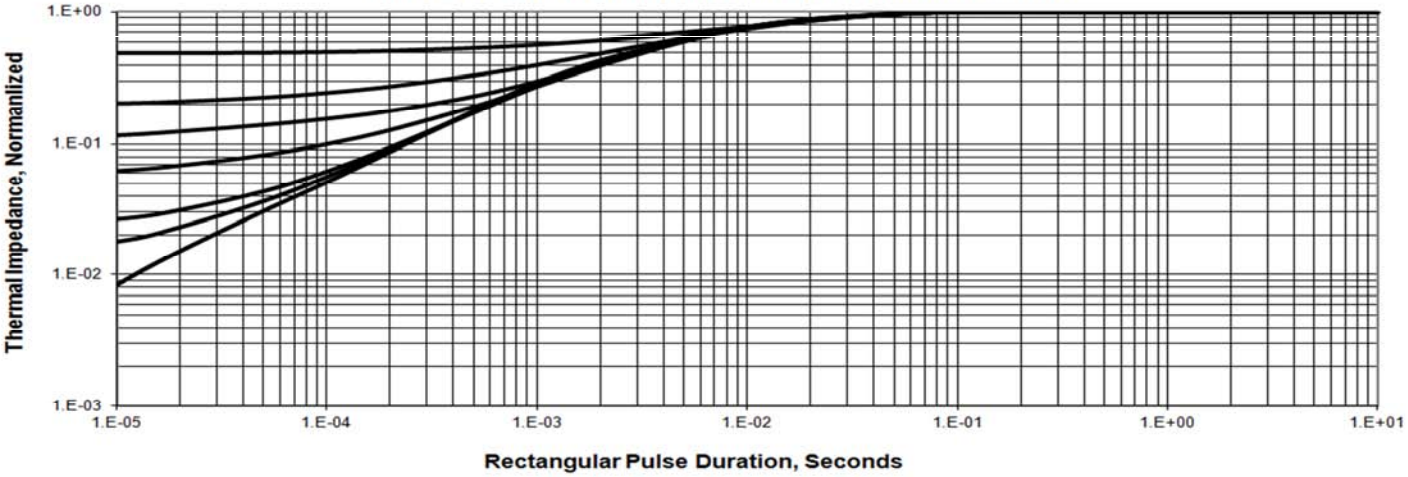

Figure 2 . Max. Power Dissipation vs Case Temperature

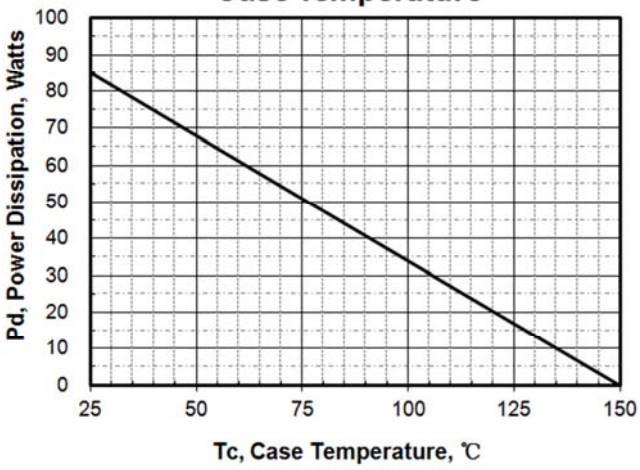

Figure 3 .Maximum Continuous Drain Current vs Tc

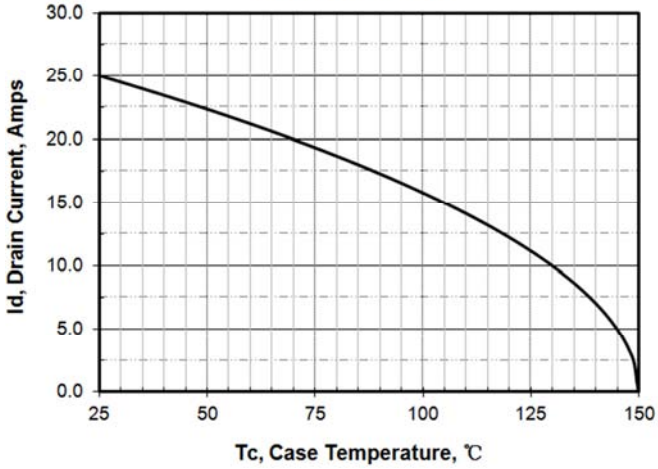

Figure 4. Output Characteristics

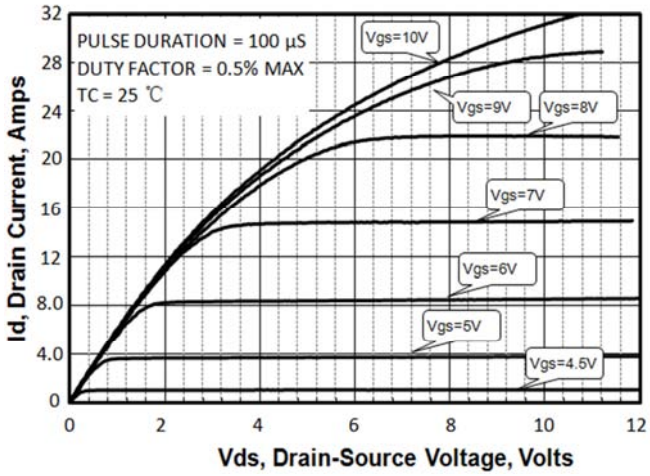

Figure 5. Rdson vs Gate Voltage

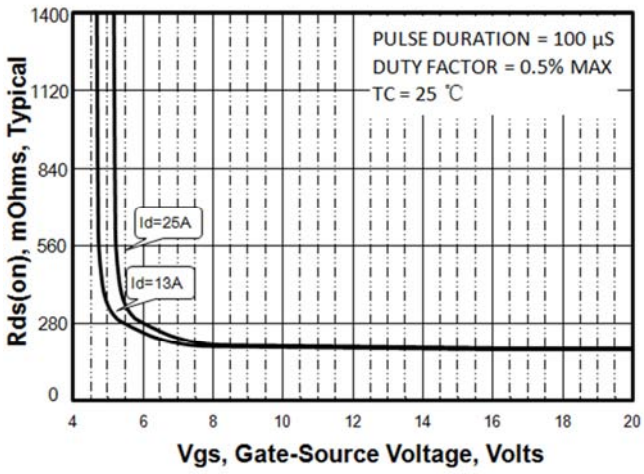

●Typical Characteristics(cont.)

Figure 6. Peak Current Capability

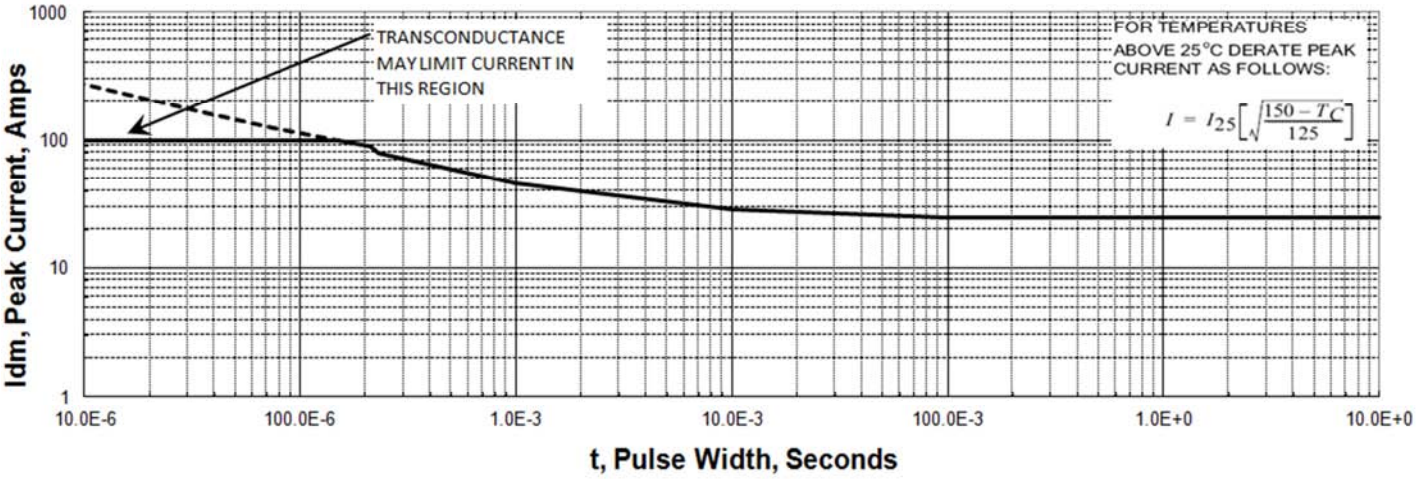

Figure 7. Transfer Characteristics

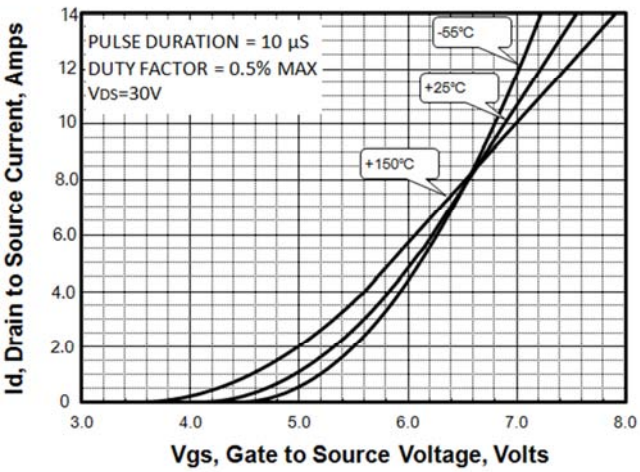

Figure 8. Unclamped Inductive Switching Capability

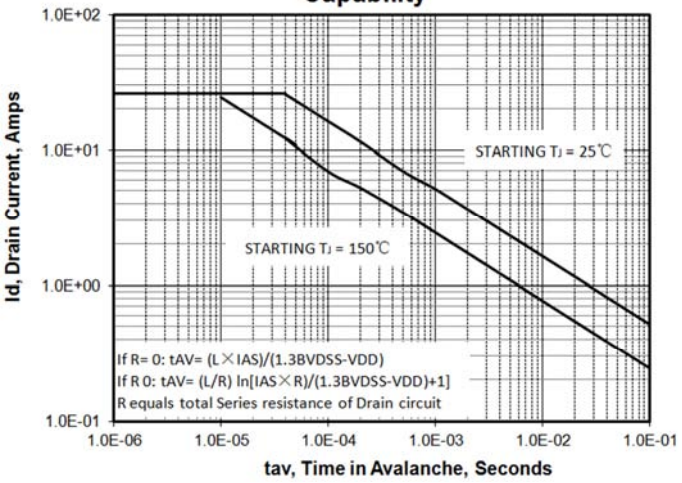

Figure 9. Drain to Source ON Resistance vs Drain Current

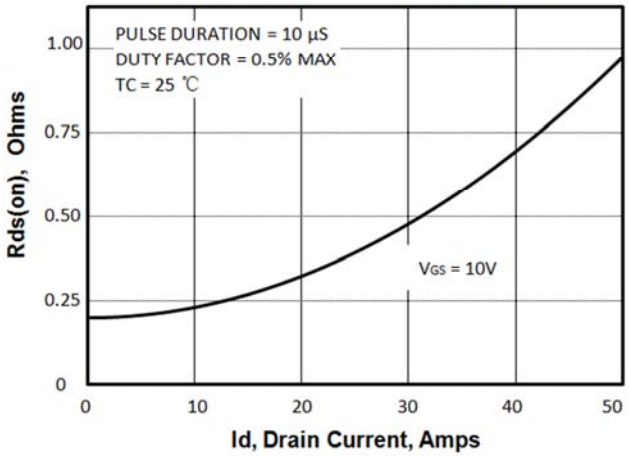

Figure 10. Rdson vs Junction Temperature

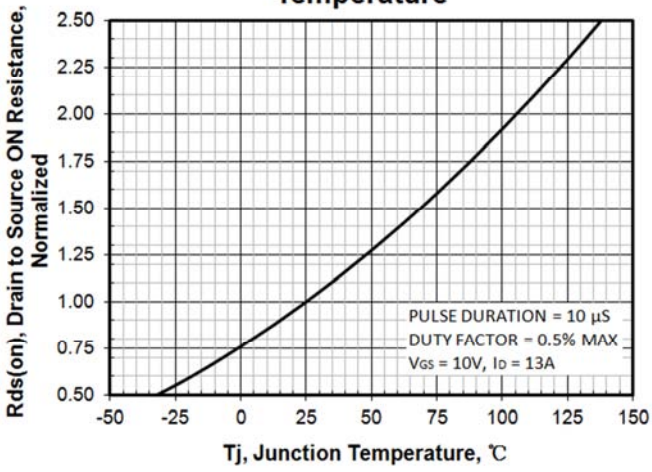

●Typical Characteristics(cont.)

Figure 11.Breakdown Voltage vs Temperature

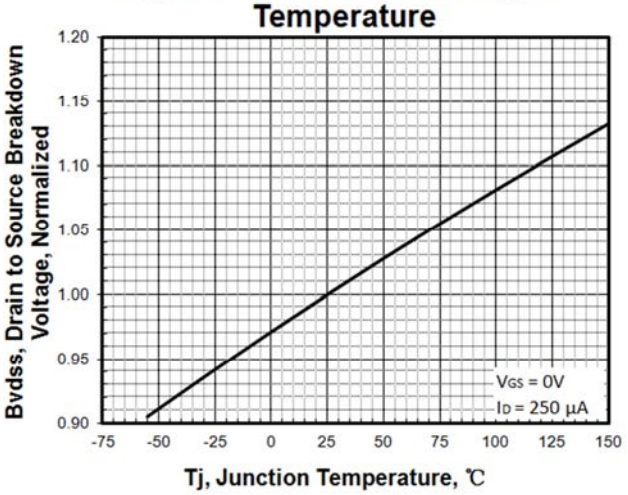

Figure 12.Threshold Voltage vs Temperature

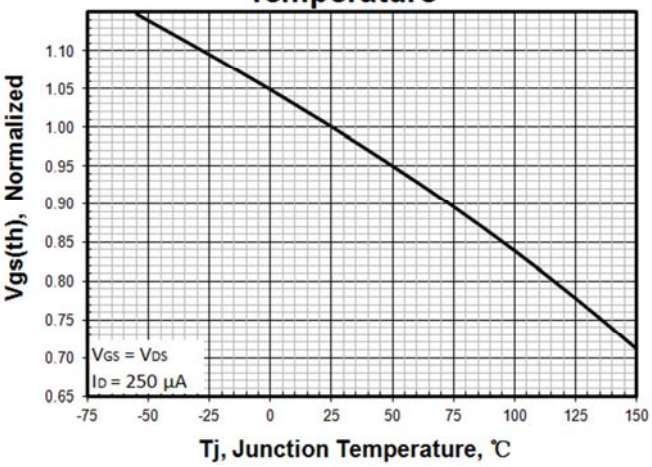

Figute 13.Maximum Safe Operating Area(220F)

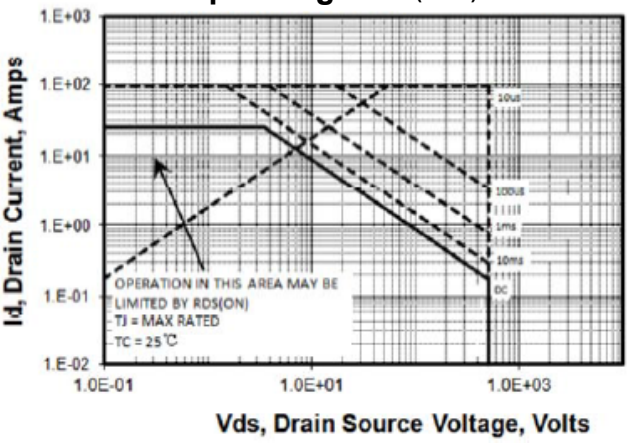

Figute 14.Maximum Safe Operating Area(220)

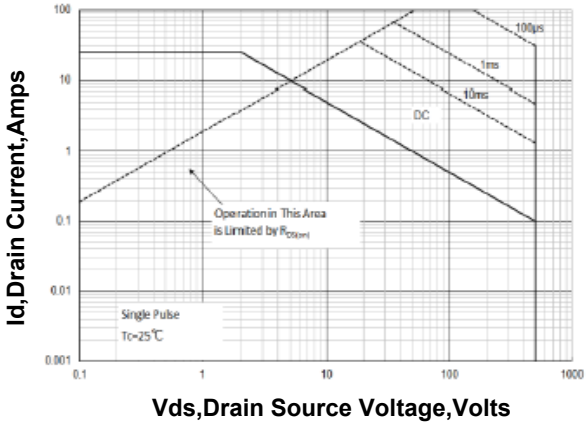

Figute 15.Capacitance vs Vds

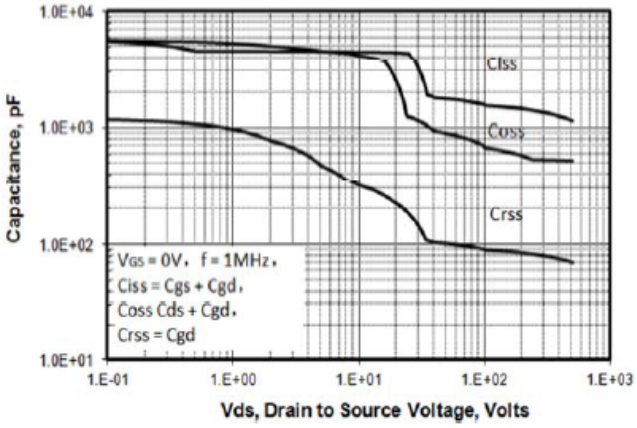

Figure 16.Body Diode Transfer Characteristics

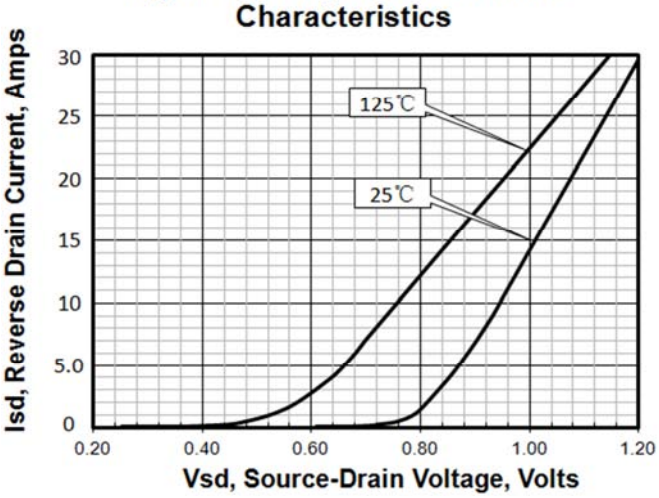

- **Test Circuit & Waveforms**

Fig. 1.1 Peak Diode Recovery dv/dt Test Circuit

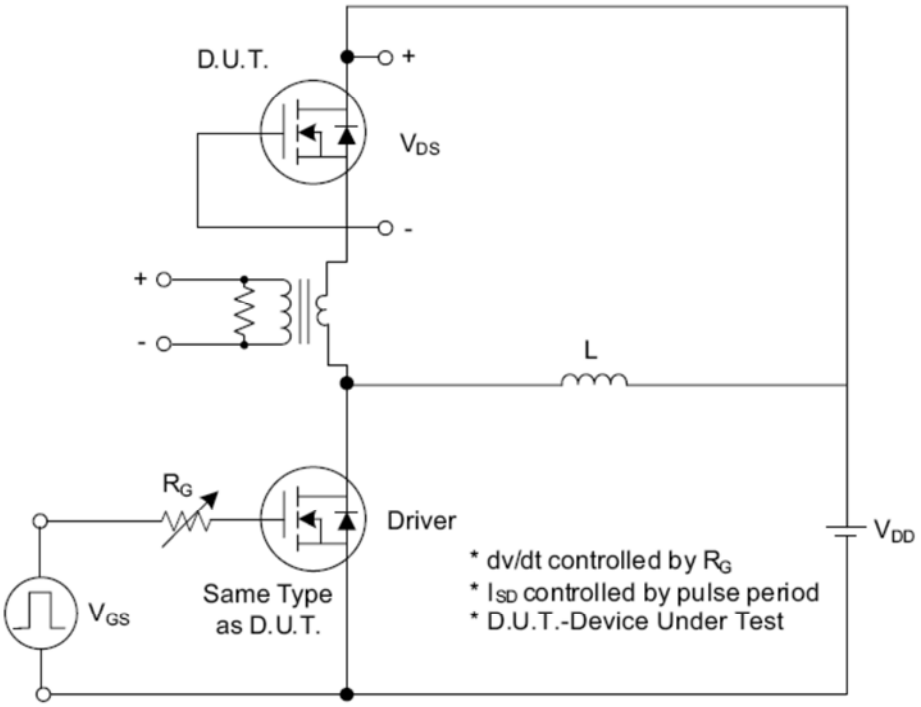

Fig. 1.2 Peak Diode Recovery dv/dt Waveforms

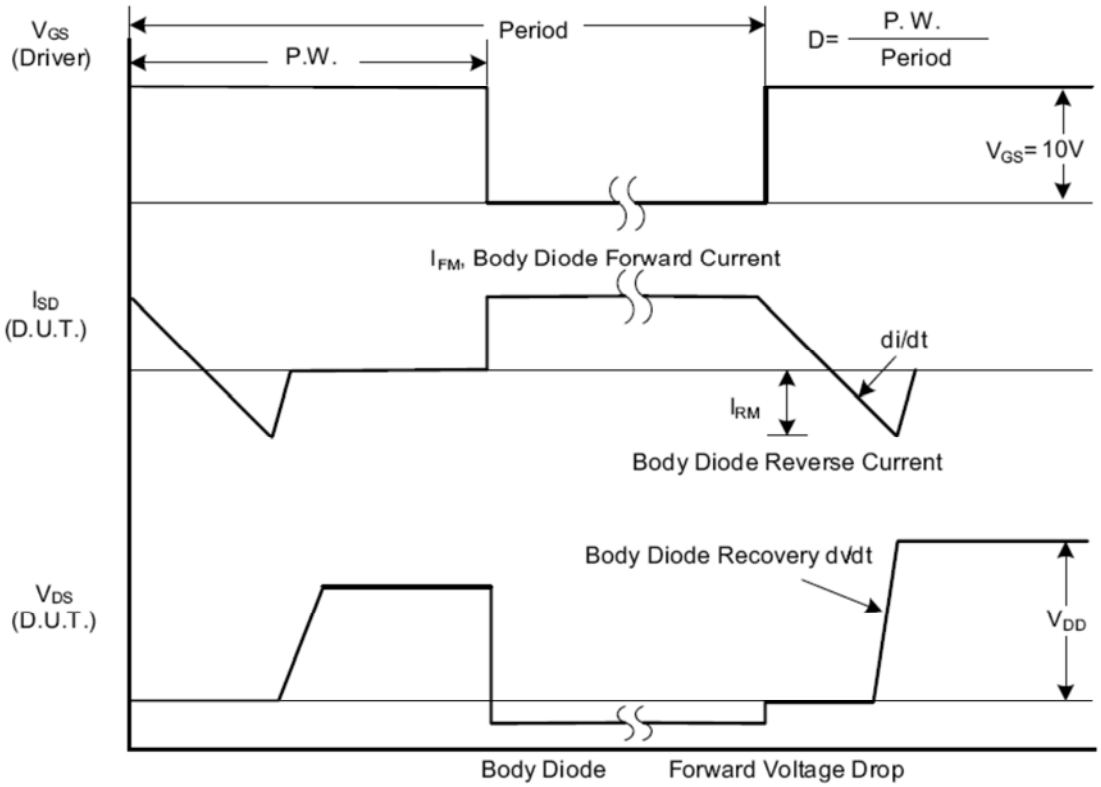

• Test Circuit & Waveforms(cont.)

Fig.2.1 Switching Test Circuit

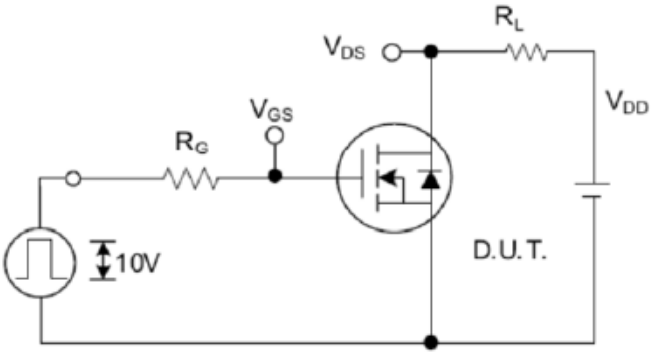

Fig.2.2 Switching Waveforms

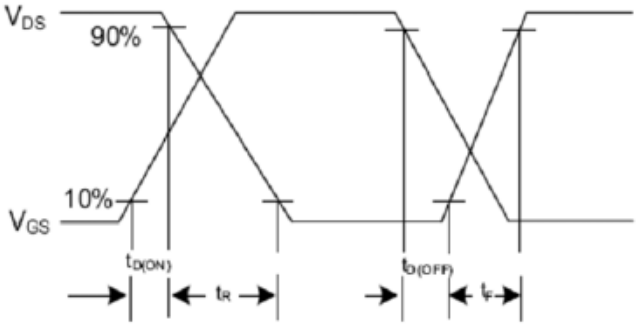

Fig.3.1 Gate Charge Test Circuit

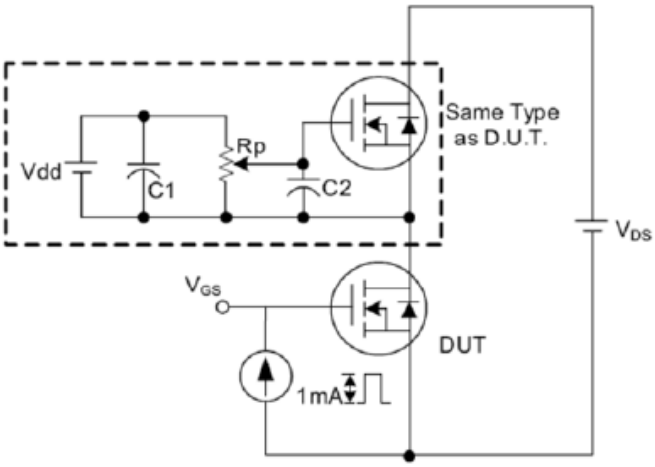

Fig.3.2 Gate Charge Waveform

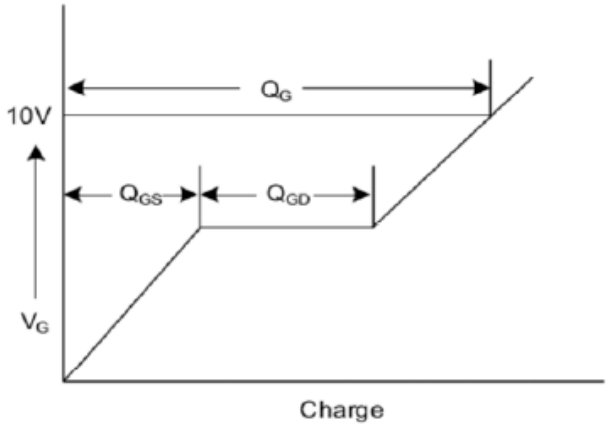

Fig.4.1 Unclamped Inductive Switching Test Circiut

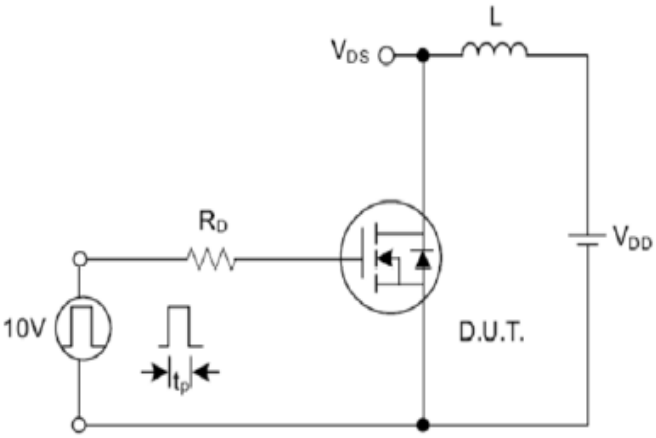

Fig.4.2 Unclamped Inductive Switching Waveforms

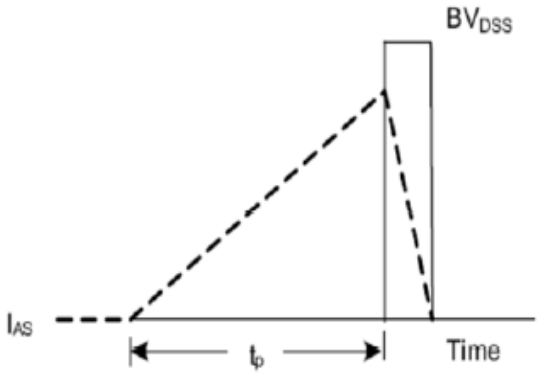

●Dimensions（TO-220)

UNIT:mm

SYMBOL	min	max	SYMBOL	min	max
A	4.25	4.85	B1	2.60	3.00
A1	2.30	3.00	e	2.40	2.70
A2	1.20	1.40	e1	4.95	5.25
b	0.60	0.90	L	12.60	14.40
b1	1.10	1.70	L1	2.40	4.00
c	0.40	0.70	⌀P	3.50	3.90
D	9.80	10.60			
B	15.20	16.20			

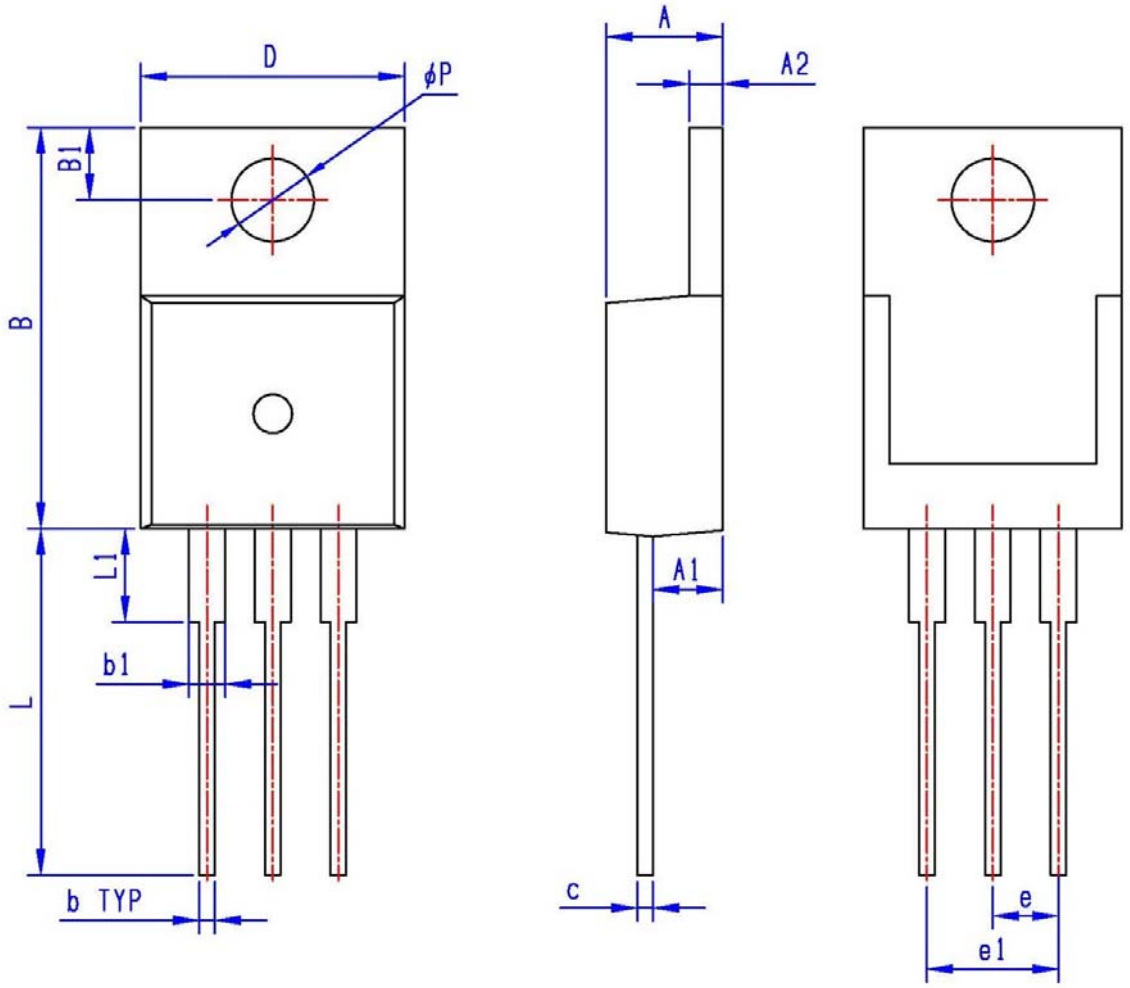

●Dimensions（TO-220F)

UNIT:mm

SYMBOL	min	max	SYMBOL	min	max
A	4.20	4.80	E1	8.30	8.70
A1	2.50	2.90	e	2.40	2.70
A2	2.90	3.30	e1	4.95	5.25
b	0.40	0.80	F	2.50	2.90
b1	1.10	1.50	L	13.00	14.00
c	0.50	0.70	L1	3.00	4.00
D	9.80	10.60	⌀P	2.90	3.50
E	14.60	15.60